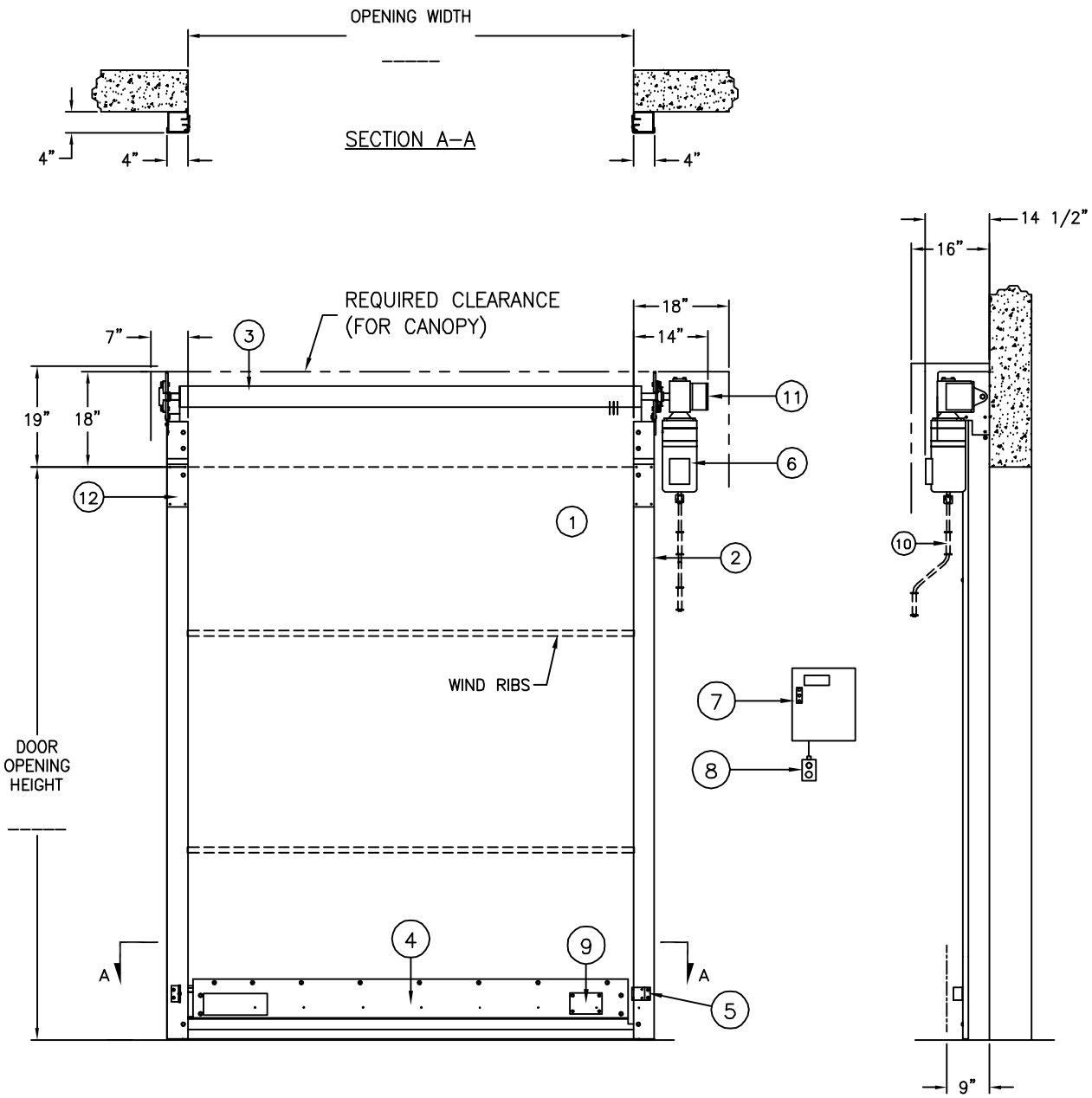

1 – DOOR FABRIC
2 – STEEL UPRIGHT C/W FRONT COVER (4" WIDE)
3 – FABRIC ROLL DRUM
4 – BREAKAWAY BOTTOM BAR C/W "SUPEREDGE SENSOR"
5 – THRESHOLD PHOTO EYE
6 – MOTOR C/W BRAKE AND GEARBOX
7 – NON METALLIC NEMA 4X CONTROL PANEL
8 – 1 PUSH BUTTON STATION C/W GREEN PUSH BUTTON AND RED EMERGENCY STOP
9 – WIRELESS BOTTOM BAR CONTROLLER
10 – MANUAL CRANK HANDLE
11 – ENCODER BOX
12 – AUTO–RETURN FEATURE

DOOR OPENING

_____ W x _____ H

QUANTITY: _____

POWER: 208 VOLTS 3 PHASE

SPEED ☐ SINGLE–32 ☐ DUAL–50

MOTOR LOCATION ☐ LEFT ☐ RIGHT

CONTROL PANEL ☐ LEFT ☐ RIGHT

FABRIC TYPE: MONOFILAMENT
FABRIC COLOUR: BLUE

OPTIONS–ACTIVATION (CHECK DESIRED OPTIONS)
☐ FLOOR LOOP DETECTOR (WIRE BY OTHERS)
☐ PHOTO EYE QUANTITY _1_ Pcs
☐ REFLECTIVE ☐ THRU–BEAM
☐ MOTION DETECTOR QUANTITY _____Pcs
☐ RADIO CONTROL(STD. 2 TRANSMITTERS)
☐ SINGLE BUTTON ☐ MULTI–BUTTON _____ Pcs
☐ GREEN PUSH BUTTON STATION _____ Pcs
☐ EMERGENCY STOP STATION
☐ PULL CORD QUANTITY _2_ Pcs
☐ COMBO STATION–GREEN PUSH BUTTON STATION EMERGENCY STOP
☐ OTHER _____

OPTIONS–EXTRA REVERSING DEVICES (CHECK DESIRED OPTIONS)
☐ PHOTO EYE THRU–BEAM QUANTITY _____ Pcs
☐ FLOOR LOOP DETECTOR (WIRE BY OTHERS)

COMMUNICATION DEVICES
☐ BEACON WARNING LIGHT QUANTITY _____ Pcs
☐ HORN QUANTITY _____ Pcs
☐ TRAFFIC LIGHT QUANTITY _____ Pcs
☐ OTHER _____

OPTIONS DOOR (CHECK DESIRED OPTIONS)
☐ WINDOW
☐ FULL ☐ PARTIAL _____
☐ FABRIC ROLL CANOPY ☐ MOTOR CANOPY
☐ PAINTED ☐ GALVANIZED ☐ STAINLESS STEEL
☐ HOT DIP GALVANIZED FRAME
☐ STAINLESS STEEL FRAME
☐ PROJECTION FRAME _____
☐ OTHER _____

SUPER SEAL

SERIES 8500 – MODEL 8500LC
SPECIAL CLEARANCE REQUIREMENTS

DATE: MAY–31–18	SCALE: 1:32
DRAWN: AS	DWG NO: L8500LC–A–4IN
APPROVED: ST	PART NO: N/A